KGW ISOTHERM

Dewar flasks cylindrical

Typ C

Typ G-C

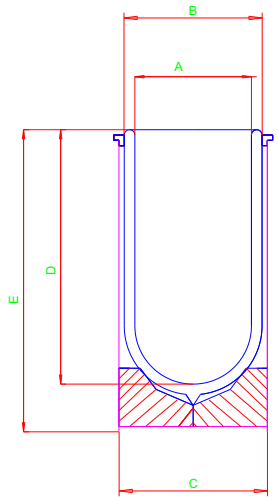

Technical specification							LN2				
Type	max.capacity	A	B	C	D	E	evapoation rate	Type	Art. No.	Type	Art. No.
	ca. [ml]	mm	mm	mm	mm	mm	ca. [Liter / day]				
00 C	100	40	56	63	90	135	0,3	00 C	1021		
0 C	200	40	56	63	170	215	0,2	0 C	1022	G 0 C	1061
1 C	300	47	60	72	190	240	0,2	1 C	1023	G 1 C	1062
2 C	450	47	60	72	270	310	0,25	2 C	1024	G 2 C	1063
3 C	500	57	70	81	210	260	0,35	3 C	1025	G 3 C	1064
4 C	750	57	70	81	310	370	0,3	4 C	1026	G 4 C	1065
5 C	1250	57	70	81	500	550	0,25	5 C	1027		
6 C	800	67	80	90	240	295	0,35	6 C	1028	G 6 C	1066
7 C	1200	67	80	90	350	395	0,3	7 C	1029	G 7 C	1067
8 C	1700	67	80	90	500	560	0,3	8 C	10210		
9 C	1000	77	95	105	235	290	0,35	9 C	10211	G 9 C	1068
10 C	1500	77	95	105	345	395	0,4	10 C	10212	G 10 C	1069
11 C	2100	77	95	105	500	550	0,4	11 C	10213		
12 C	1500	90	115	124	245	300	0,5	12 C	10214	G 12 C	10610
13 C	2000	90	115	124	340	390	0,5	13 C	10215	G 13 C	10611
14 C	3200	90	115	124	600	665	0,45	14 C	10216		
15 C	1500	100	120	130	240	300	0,7	15 C	10217	G 15 C	10612
16 C	2000	100	120	130	290	345	0,6	16 C	10218	G 16 C	10613
17 C	4000	100	120	130	600	660	0,65	17 C	10219		
18 C	2500	110	130	140	290	345	0,7	18 C	10220	G 18 C	10614
19 C	5000	110	130	140	600	660	0,6	19 C	10221		
20 C	3000	138	160	165	230	280	1,2	20 C	10222	G 20 C	10615
S 21 C	4000	138	160	165	310	375	1,0	S 21 C	10223	GS 21 C	10616
S 22 C	8000	138	160	165	600	660	0,9	S 22 C	10224	GS 22 C	10617

Characteristics

Dewar flasks made of Borosilikatglass 3.3 DIN/ISO 3585, for storing and transporting of LN2, CO2 and other cooling liquids. Temperature range from -200 to +200°C.
The Dewar flasks are vacuum insulated and silvered. They have a blue coated metal cover.

Standard versions

Type C = cylindrical with cover
Type G-C = cylindrical with cover and side grip

Custom made versions

Dewar flasks with viewing strips
Dewar flasks shortened

Dewar flasks made of stainless steel

Type GSS

Type DSS

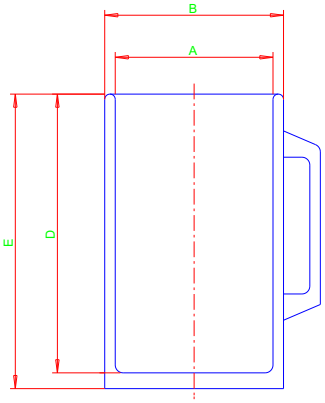

Technical specification						LN2				
Type	capacity	A	B	D	E	evaporation rate				
	ca. [ml]	mm	mm	mm	mm	ca. [L / d]	Type	Art.No.	Type	Art.No.
GSS 500	500	65	87	180	203	1,0	GSS 500	2304	DSS 500	2100
GSS 1000	1000	85	107	206	231	0,9	GSS 1000	2300	DSS 1000	2101
GSS 1000 W	1000	100	122	157	177	1,6	GSS 1000 W	2301	DSS 1000 W	2102
GSS 2000	2000	100	122	285	312	1,1	GSS 2000	2303	DSS 2000	2103
GSS 3000	3000	185	200	160	190	3,1	GSS 3000	2302	DSS 3000	2104
GSS 6000	6000	185	200	270	300	2.9	GSS 6000	2305	DSS 6000	2105

Characteristics

The Dewar flasks are made of stainless steel and vacuum insulated . The Dewar flasks type GSS have a side grip and a handle. The flasks type DSS have only a handle. The Dewar flasks have a temperature range from -200 to +200°C.

Dewar flasks with flat bottom

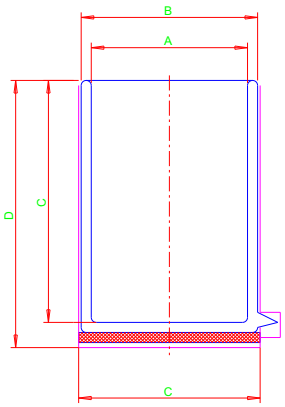

Characteristics

Dewar flasks made of Borosilikatglass 3.3 DIN/ISO 3585, for storing and transporting of LN2, CO2 and other cooling liquids. Temperature range from -200 to +200°C. The Dewar flasks have a flat bottom and they are vacuum insulated and silvered. They have a Stucco aluminum cover. The cover is antimagnetic and stainless.

Technical specification							LN2		
Type	capacity	A	B	C	D	E	evaporation rate		
	ca. [ml]	mm	mm	mm	mm	mm	ca. [L / d]		
								Type	Art.No.
FB 0 CAL	150	37	50	58	140	170	0,25	FB 0 CAL	1151
FB 1 CAL	250	47	60	72	140	170	0,35	FB 1 CAL	1152
FB 3 CAL	450	57	70	81	185	220	0,35	FB 3 CAL	1153
FB 6 CAL	650	67	80	90	185	220	0,4	FB 6 CAL	1154
FB 9 CAL	850	77	95	105	185	220	0,55	FB 9 CAL	1155
FB 12 CAL	1200	90	115	124	185	225	0,7	FB 12 CAL	1156
FB 18 CAL	2100	107	130	140	235	275	0,9	FB 18 CAL	1157

Dish- shaped Dewar flasks

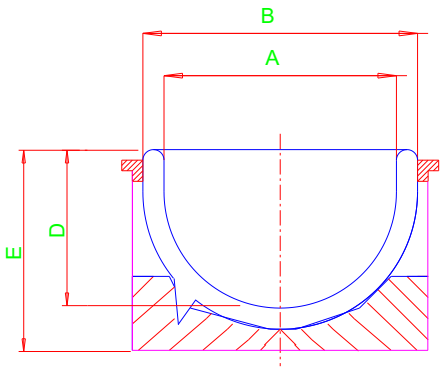

Characteristics

Dewar flasks made of Borosilikatglass 3.3 DIN/ISO 3585, for storing and transporting of LN2, CO2 and other cooling liquids. Temperature range from -200 to +200°C. The Dewar flasks is vacuum insulated and silvered. They have a Stucco aluminum cover. The cover is antimagnetic and stainless.

Type SCH 9 CAL

Type	max. capacity	A	B	C	D	E	Type	article No.	Type	article No.
	ca. [ml]	mm	mm	mm	mm	mm				
SCH 6 CAL	80	67	80	90	40	75	SCH 6 CAL	1191	SCH 6 C-E	1191 E
SCH 9 CAL	120	77	95	110	50	90	SCH 9 CAL	1192	SCH 9 C-E	1192 E
SCH 15 CAL	260	100	120	130	65	110	SCH 15 CAL	1193	SCH 15 C-E	1193 E
SCH 18 CAL	400	110	130	138	70	115	SCH 18 CAL	1194	SCH 18 C-E	1194 E
SCH 20 CAL	680	138	160	170	80	125	SCH 20 CAL	1195	SCH 20 C-E	1195 E
SCH 30 CAL	1600	170	205	215	110	145	SCH 30 CAL	1196	SCH 30 C-E	1196 E
SCH 31 CAL	3000	200	230	238	125	160	SCH 31 CAL	1197	SCH 31 C-E	1197 E
SCH 33 CAL	5800	250	280	292	150	195	SCH 33 CAL	1198	SCH 33 C-E	1198 E

Dewar carrying flasks

Type B

Type B-E

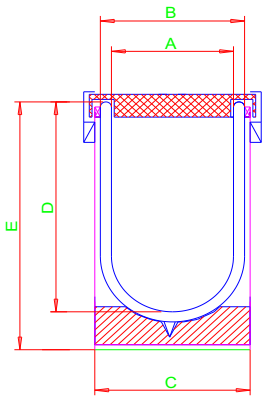

Technical specification							LN2			
Type	capacity	A	B	C	D	E	evaporation rate			
	ca. [L]	mm	mm	mm	mm	mm	ca. [L / d]	Type	article No.	Type
26 B (26BE)	1	100	120	130	150	215	1,1	26 B	1211	26 BE
27 B (27BE)	2	138	160	165	170	245	1,7	27 B	1212	27 BE
28 B (28BE)	3	138	160	165	230	305	1,5	28 B	1213	28 BE
29 B (28BE)	4	138	160	165	310	385	1,3	29 B	1214	29 BE

Characteristics

Dewar flasks made of Borosilikatglass 3.3 DIN/ISO 3585, for storing and transporting of LN2, CO2 and other cooling liquids. Temperature range from -200 to +200°C. They are vacuum insulated and silvered. The cover has a handle, clamps and a lid.

Versions

Type B = metal - cover, blue coated.

Type B-E = stainless steel cover

Large insulating Dewar flasks

Type C

Type CAL

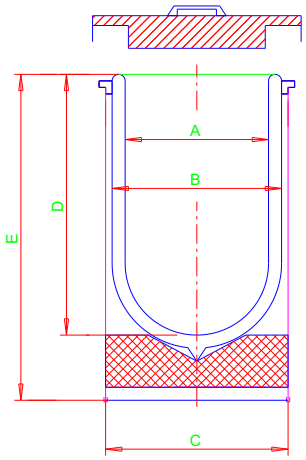

Technical specification											
	capacity	A	B	C	D	E	CO2				
							evaporation rate				
Type	ca. [L]	mm	mm	mm	mm	mm	ca. [kg / d]	Type	Art. No.	Type	Art. No.
30/4	4	158	183	210	250	340	0,45	30 / 4 C	1248	30/4 CAL	1258
30/7	7	158	183	210	400	490	0,4	30 / 7 C	1249	30/7 CAL	1259
30	7	200	230	250	275	385	0,45	30 C	1241	30 CAL	1251
31	10	200	230	250	350	475	0,4	31 C	1242	31 CAL	1252
32	14	200	230	250	500	610	0,4	32 C	1243	32 CAL	1253
33	21	250	280	300	480	615	0,6	33 C	1244	33 CAL	1254
34	28	250	280	300	620	750	0,6	34 C	1245	34 CAL	1255
35	40	280	330	355	650	780	0,9	35 C	1246	35 CAL	1256

Characteristics

Dewar flasks made of Borosilikatglass 3.3 DIN/ISO 3585, for storing and transporting of LN2, CO2 and other cooling liquids. Temperature range from -200 to +200°C. The Dewar flasks are vacuum insulated and silvered. The cover has a handle or side grips and a lid.

Versions

Type C = metal - cover, blue coated.

Type CAL = Stucco aluminum cover

Type C- E = stainless steal on request

Spherical Dewar flasks for LN2

Type AL

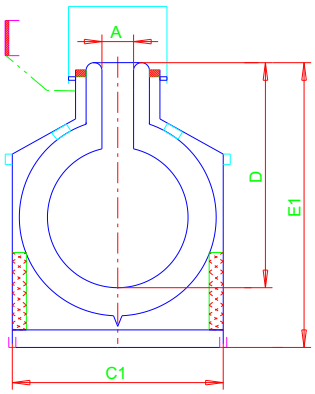

Characteristics

Dewar flasks made of Borosilikatglass 3.3 DIN/ISO 3585, for storing and transporting of LN2. The Dewar flasks are vacuum insulated and silvered. They have a aluminum cover with handle and a lid.

Custom made versions

Dewar flasks with viewing strips

Technical specification						LN2	
Type	max. capacity	A	D	C1	E1	evaporation rate	
	ca. [L]	mm	mm	mm	mm	ca. [Liter / day]	article No.
21 AL	1	30	235	175	300	0,2	1291
22 AL	3	60	305	225	380	0,4	1292
23 AL	5	60	350	260	450	0,4	1293
24 AL	10	65	380	330	480	0,6	1294

Vacuum-insulated stainless steel container for liquid nitrogen Type APOLLO Typ Apollo

Characteristics

High mechanical stability, the container is made of stainless steel. Low evaporation rate by multi-layer superinsolation in the vacuum space. Very durable by robust constructive design, production and choice of material. Long holding time by the use of adsorption and getter materials.

Standard equipment

Integrated safety devices at the container neck
Vacuum lock with safety valve
Easy running castors
Mini-flange-joint NW 50 KF
Transfer siphon with transfer hose covered with metallic tissue
Hand and protection ring
Contents gauge
Pressure attachment by fluid removal without external power supply

Liquid nitrogen container made of stainless steel for storage and transport of liquid nitrogen						
Typ Apollo		**50**	**100**	**150**	**200**	**350**
Art.-No.		**2507**	**2508**	**2509**	**2510**	**2513**
Capacity	**(l)**	**49,5**	**99,2**	**149,5**	**198,5**	**348**
Max. operating overpressure	**(bar)**	**1,3**	**1,3**	**1,3**	**2,0**	**2,0**
Weight empty	**(kg)**	**44**	**62**	**79**	**100**	**160**
Weight full	**(kg)**	**85**	**145**	**204**	**266**	**450**
Overal height	**(cm)**	**80**	**114**	**146**	**117**	**165**
Diameter	**(cm)**	**50**	**50**	**50**	**70**	**70**
Overall width	**(cm)**	**65**	**65**	**65**	**80**	**80**
Evaporation rate static	**(% / 24h)**	**2,0**	**1,2**	**1,0**	**0,6**	**0,5**

Accessoires and more info see our homepage www.kgw-isotherm.de

Liquid nitrogen container made of aluminium

Characteristics

Light aluminium container with compound materials in the neck range
Low own weight
Superinsolation foil in the vacuum space
Low evaporation rate

Standard equipment

Handle
Vacuum valve
Mini-flange NW 50 KF
Loose lied plug

Liquid nitrogen container made of aluminium for storage and transport of liquid nitrogen								
Typ ALU		**7**	**10**	**20**	**26**	**35**	**60**	**100**
Art.-No.		**2515**	**2516**	**2517**	**2518**	**2519**	**2521**	**2522**
Capacity	**(l)**	**7**	**12**	**21**	**26**	**34**	**60**	**99**
Max. operating overpressure	**(bar)**	**0,5**	**0,5**	**0,5**	**0,5**	**0,5**	**0,5**	**0,5**
Weight empty	**(kg)**	**6**	**7,5**	**11**	**13,5**	**16**	**21,5**	**29,5**
Weight full	**(kg)**	**12**	**17,5**	**28,5**	**34,5**	**43**	**70**	**110**
Overal height	**(mm)**	**480**	**584**	**605**	**670**	**655**	**870**	**986**
Diameter	**(mm)**	**308**	**308**	**388**	**388**	**468**	**468**	**510**
Evaporation rate static	**(L / day)**	**0,2**	**0,2**	**0,18**	**0,2**	**0,24**	**0,4**	**0,55**
Static holding time (days)		**36**	**67**	**119**	**130**	**140**	**150**	**180**
Roller base				**2640**	**2640**	**2641**	**2641**	**2642**

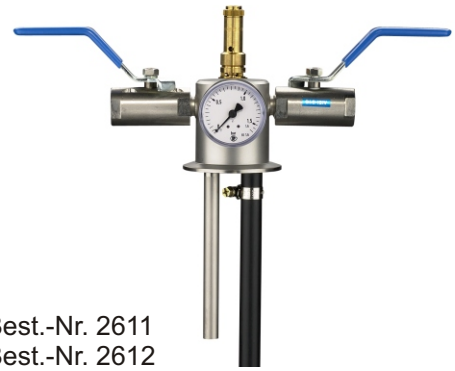

Accessories

Transfer siphon incl. safety valve, manometer, pressure reduction valve made of stainless steel and fluid valve made of stainless steel	Best.-Nr. 2611
Transfer hose made of stainless steel	Best.-Nr. 2612
Transfer tube with phase separator	Best.-Nr. 2613
Screw coupling with tube fitting for pipe joint (D.a.=8 mm)	Best.-Nr. 2614
Screw adapter	Best.-Nr. 2615
Clamp and O-ring with centering	Best.-Nr. 2618+2619

Cold traps with Dewar flask

Typ KF 29 K

Typ KF 29 OK -A

Typ KF 29 GL

Typ KF 29 GL-A

Cold traps complete	Condensate	Coolant	Dewar	Cold trap	Art. No.		Assesoirs	Art. No.
Type	capacity	capacity	Type	joints			Cold trap	Art. No.
Typ KF 29-K	150 ml	1000 ml	12 C	S 29	1731		Cold trap S 29	1732
Typ KF 29-OK	150 ml	1000 ml	12 C	O 29	1735		Cold trap S 29 O	1736
Typ KF 29-GL	150 ml	1000 ml	12 C	GL 18	1740		Cold trap S 29 GL	1741
Typ KFL 29-K	250 ml	2000 ml	18 C	S 29	17360		Cold trap SL 29	17365
Typ KFL 29-OK	250 ml	2000 ml	18 C	O 29	17361		Cold trap SL 29 O	17366
Typ KFL 29-GL	250 ml	2000 ml	18 C	GL 18	17362		Cold trap SL 29 GL	17367
Typ KF 29-K-A	150 ml	1000 ml	12 C	S 29	17370		Cold trap S 29-A	17375
Typ KF 29-OK-A	150 ml	1000 ml	12 C	O 29	17371		Cold trap S 29 O-A	17376
Typ KF 29-GL-A	150 ml	1000 ml	12 C	GL 18	17372		Cold trap S 29 GL-A	17377
Typ KFL 29-K-A	250 ml	2000 ml	18 C	S 29	17380		Cold trap SL 29-A	17385
Typ KFL 29-OK-A	250 ml	2000 ml	18 C	O 29	17381		Cold trap SL 29 O-A	17386
Typ KFL 29-GL-A	250 ml	2000 ml	18 C	GL 18	17382		Cold trap SL 29 GL-A	17387

Characteristics

Cold traps and Dewar flasks are made of Borosilikatglass 3.3 DIN/ISO 3585 for LN2 in vacuum application. The Dewar flasks are silvered and evacuated . The Dewar flasks have an aluminum casing and a plastic ring for fixing the cold trap. So the customers do not need clamps to fix the cold trap.

Volume of the complete cold trap

1) cold trap
2) fixing ring
3) Dewar flask

You can have the cold tap:

- with spherical joint = Type S29
- with glass screw thread and PTFE Olive = Type S29 GL
- with spherical joint with O-ring = Type S29 O
- with condensat outlett = Type -A

For more cold traps please visit our home page: WWW.KGW-ISOTHERM.COM

What do you need for a complete reactor with accessories

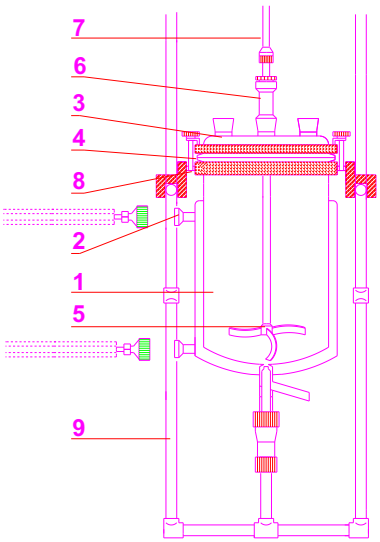

stationary frame

1) reactor	capacity size of flange NW 60 to 200 outlet valve (valve type L or type J) thermal jacket connection (GL 18 or DN 15)
2) thermal jacket connection DN 15	metal adapter DN 15 sealant DN 15 (silicone or PTFE) thermal jacket hose (0,5 to 3 meters)
3) reactor lid	size of flange NW 60 to 200 center socket (NS 29/32 or NS 45/40) side socket (NS 14/23 to NS 45/40 / straight or angled)
4) O-ring	size NW 60 to 200 silicone FEP covered
5) stirrer	shaft of stirrer (8, 10 or 16 mm) Anchor stirrer Propeller stirrer
6) dynamic seals for stirrer	joint (NS 29/32 or 45/40) standard dynamic seals for stirrer magnetic stirrers coupling ceramic mechanical seals
7) coupling for stirrer	shaft of stirrer (8, 10 or 16 mm) type RKS type RKF
8) seal and holder for reactor vessels	size NW 60 to 200 type “Vario Grip” type universal supporting device type supporting device
9) frames	size of the reactor table frame stationary frame transportable frame

transportable frame

Further accessories are a thermostat and a stirrer.
On request we would like to offer thermostats, stirrers, stirring tools and lids made of stainless steel.

Single walled reaction vessels

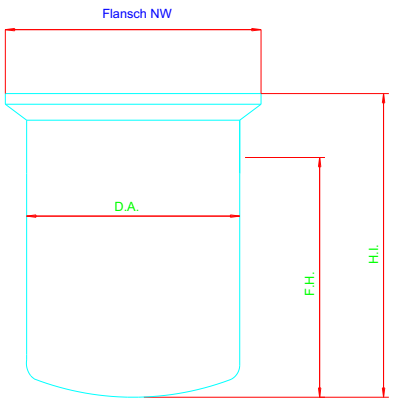

Reactor without valve

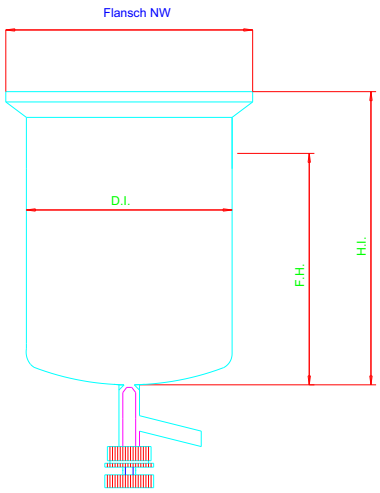

Reactor with L-valve

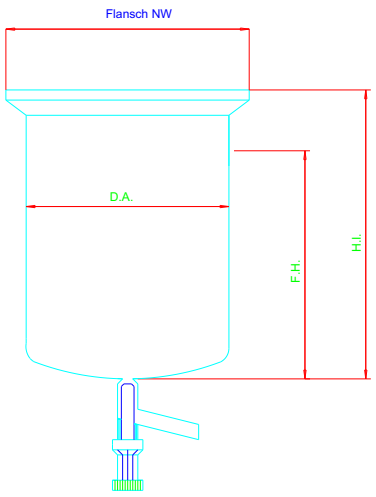

Reactor with J-valve

capacity						without valve	with L - valve	with J - valve
ml	D.A.	F.H.	H.I.	flange	B.D.bar	Art.No.	Art.No.	Art.No.
250	70	100	130	NW 60	2,5 bar	TRGN 6901	TRGN 6934	TRGN 6968
500	70	190	220	NW 60	2,5 bar	TRGN 6902	TRGN 6935	TRGN 6969
1000	70	380	410	NW 60	2,5 bar	TRGN 6903	TRGN 6936	TRGN 6970
500	110	80	110	NW 100	1,5 bar	TRGN 6908	TRGN 6941	TRGN 6974
1000	110	150	180	NW 100	1,5 bar	TRGN 6909	TRGN 6942	TRGN 6975
2000	110	270	300	NW 100	1,5 bar	TRGN 6910	TRGN 6943	TRGN 6976
3000	110	390	420	NW 100	1,5 bar	TRGN 6911	TRGN 6944	TRGN 6977
4000	110	530	560	NW 100	1,5 bar	TRGN 6912	TRGN 6945	TRGN 6978
500	130	60	90	NW 120	1,3 bar	TRGN 6923	TRGN 6956	TRGN 6989
1000	130	100	130	NW 120	1,3 bar	TRGN 6924	TRGN 6957	TRGN 6990
2000	130	190	220	NW 120	1,3 bar	TRGN 6925	TRGN 6958	TRGN 6991
3000	130	280	310	NW 120	1,3 bar	TRGN 6926	TRGN 6959	TRGN 6992
4000	130	360	390	NW 120	1,3 bar	TRGN 6927	TRGN 6960	TRGN 6993
5000	130	460	490	NW 120	1,3 bar	TRGN 6928	TRGN 6961	TRGN 6994
6000	130	540	570	NW 120	1,3 bar	TRGN 6929	TRGN 6962	TRGN 6995
4000	160	240	280	NW 150	1,0 bar	TRGN 6914	TRGN 6948	TRGN 6981
5000	160	290	330	NW 150	1,0 bar	TRGN 6915	TRGN 6949	TRGN 6982
6000	160	350	390	NW 150	1,0 bar	TRGN 6916	TRGN 6950	TRGN 6983
8000	160	460	500	NW 150	1,0 bar	TRGN 6917	TRGN 6951	TRGN 6984
10000	160	580	620	NW 150	1,0 bar	TRGN 6918	TRGN 6952	TRGN 6985
5000	215	160	200	NW 200	0,5 bar	TRGN 6930	TRGN 6963	TRGN 6996
6000	215	200	240	NW 200	0,5 bar	TRGN 6931	TRGN 6964	TRGN 6997
8000	215	260	300	NW 200	0,5 bar	TRGN 6932	TRGN 6965	TRGN 6998
10000	215	320	360	NW 200	0,5 bar	TRGN 6933	TRGN 6966	TRGN 6999
15000	215	500	540	NW 200	0,5 bar	TRGN 6934	TRGN 6967	TRGN 7000
20000	215	650	725	NW 200	0,5 bar	TRGN 6934-20	TRGN 6967-20	TRGN 7000-20

Heatable reaction vessels with thermal jacket

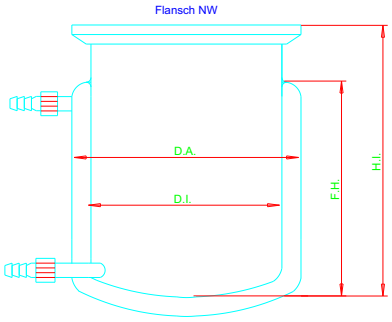

reaction vessel with Olive

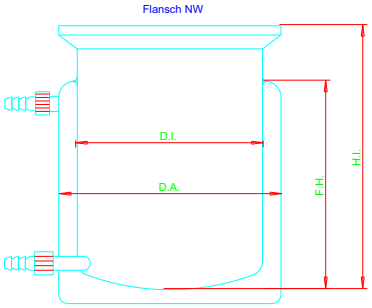

reaction vessel with flat bottom and Olive

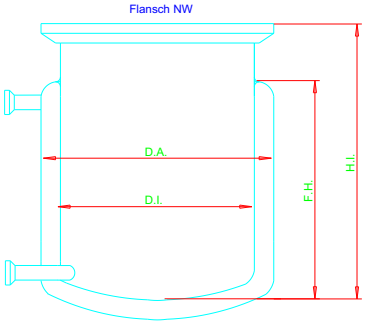

reaction vessel with DN 15

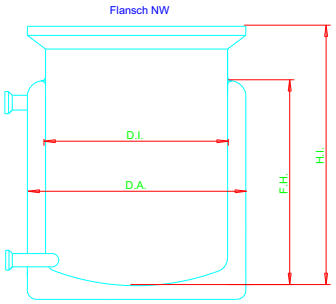

reaction vessel with flat bottom and DN 15

capacity ml	D.A.	F.H.	H.I.	flange	B.D.bar	reactor with olive Art.No.	reactor with DN 15 Art.No.	flat bottom with olive Art.No.	flat bottom with DN 15 Art.No.
250	70	100	150	NW 60	2,5 bar	TRGN 7001	TRGN 7066	TRGN 7397	TRGN 7462
500	70	190	240	NW 60	2,5 bar	TRGN 7002	TRGN 7067	TRGN 7398	TRGN 7463
1000	70	380	430	NW 60	2,5 bar	TRGN 7003	TRGN 7068	TRGN 7399	TRGN 7464
500	110	80	140	NW 100	1,5 bar	TRGN 7007	TRGN 7073	TRGN 7403	TRGN 7469
1000	110	150	210	NW 100	1,5 bar	TRGN 7008	TRGN 7074	TRGN 7404	TRGN 7470
2000	110	270	330	NW 100	1,5 bar	TRGN 7009	TRGN 7075	TRGN 7405	TRGN 7471
3000	110	390	450	NW 100	1,5 bar	TRGN 7010	TRGN 7076	TRGN 7405	TRGN 7472
4000	110	530	590	NW 100	1,5 bar	TRGN 7011	TRGN 7077	TRGN 7406	TRGN 7473
500	130	60	120	NW 120	1,3 bar	TRGN 7022	TRGN 7088	TRGN 7418	TRGN 7484
1000	130	100	160	NW 120	1,3 bar	TRGN 7023	TRGN 7089	TRGN 7419	TRGN 7485
2000	130	190	250	NW 120	1,3 bar	TRGN 7024	TRGN 7090	TRGN 7420	TRGN 7486
3000	130	280	340	NW 120	1,3 bar	TRGN 7025	TRGN 7091	TRGN 7421	TRGN 7487
4000	130	360	420	NW 120	1,3 bar	TRGN 7026	TRGN 7092	TRGN 7422	TRGN 7488
5000	130	460	520	NW 120	1,3 bar	TRGN 7027	TRGN 7092	TRGN 7423	TRGN 7489
6000	130	540	600	NW 120	1,3 bar	TRGN 7028	TRGN 7094	TRGN 7424	TRGN 7490
4000	160	240	315	NW 150	1,0 bar	TRGN 7013	TRGN 7079	TRGN 7410	TRGN 7476
5000	160	290	365	NW 150	1,0 bar	TRGN 7014	TRGN 7080	TRGN 7411	TRGN 7477
6000	160	350	425	NW 150	1,0 bar	TRGN 7015	TRGN 7081	TRGN 7412	TRGN 7478
8000	160	460	535	NW 150	1,0 bar	TRGN 7016	TRGN 7082	TRGN 7413	TRGN 7479
10000	160	580	655	NW 150	1,0 bar	TRGN 7017	TRGN 7083	TRGN 7414	TRGN 7480
5000	215	160	235	NW 200	0,5 bar	TRGN 7029	TRGN 7095	TRGN 7425	TRGN 7491
6000	215	200	275	NW 200	0,5 bar	TRGN 7030	TRGN 7096	TRGN 7426	TRGN 7492
8000	215	260	335	NW 200	0,5 bar	TRGN 7031	TRGN 7097	TRGN 7427	TRGN 7493
10000	215	320	395	NW 200	0,5 bar	TRGN 7032	TRGN 7098	TRGN 7428	TRGN 7494
15000	215	500	615	NW 200	0,5 bar	TRGN 7032	TRGN 7099	TRGN 7429	TRGN 7495
20000	215	650	725	NW 200	0,5 bar	TRGN 7032-20	TRGN 7099-20	TRGN 7429-20	TRGN 7495-20

Heatable reaction vessels with thermal jacket and valve

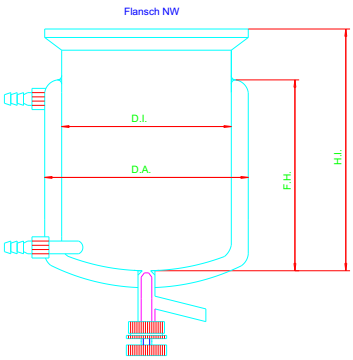

reaction vessel with Olive and L-valve

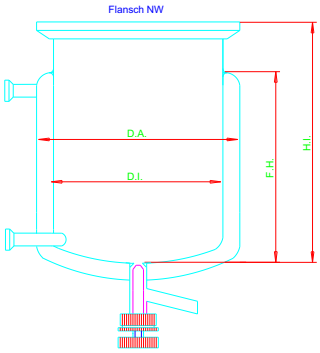

reaction vessel with DN 15 and L-valve

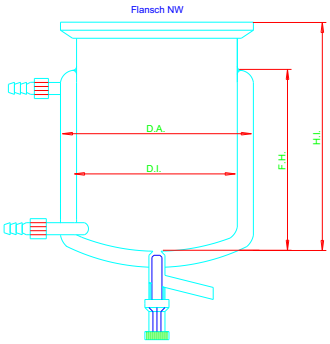

reaction vessel with Olive and J-valve

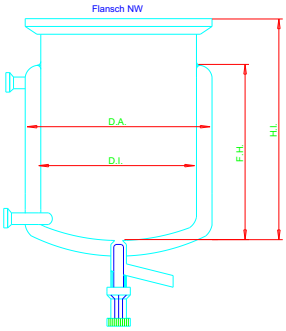

reaction vessel with DN 15 and J-valve

capacity ml	D.A.	F.H.	H.I.	flange	B.D.bar	L-valve with olive Art.No.	L-valve with DN 15 Art.No.	J-valve with olive Art.No.	J-valve with DN 15 Art.No.
250	70	100	150	NW 60	2,5 bar	TRGN 7199	TRGN 7264	TRGN 7100	TRGN 7166
500	70	190	240	NW 60	2,5 bar	TRGN 7200	TRGN 7265	TRGN 7101	TRGN 7167
1000	70	380	430	NW 60	2,5 bar	TRGN 7201	TRGN 7266	TRGN 7102	TRGN 7168
500	110	80	140	NW 100	1,5 bar	TRGN 7205	TRGN 7271	TRGN 7106	TRGN 7172
1000	110	150	210	NW 100	1,5 bar	TRGN 7206	TRGN 7272	TRGN 7107	TRGN 7173
2000	110	270	330	NW 100	1,5 bar	TRGN 7207	TRGN 7273	TRGN 7108	TRGN 7174
3000	110	390	450	NW 100	1,5 bar	TRGN 7208	TRGN 7274	TRGN 7109	TRGN 7175
4000	110	530	590	NW 100	1,5 bar	TRGN 7209	TRGN 7275	TRGN 7110	TRGN 7176
500	130	60	120	NW 120	1,3 bar	TRGN 7220	TRGN 7286	TRGN 7121	TRGN 7187
1000	130	100	160	NW 120	1,3 bar	TRGN 7221	TRGN 7287	TRGN 7122	TRGN 7188
2000	130	190	250	NW 120	1,3 bar	TRGN 7222	TRGN 7288	TRGN 7123	TRGN 7189
3000	130	280	340	NW 120	1,3 bar	TRGN 7223	TRGN 7289	TRGN 7124	TRGN 7190
4000	130	360	420	NW 120	1,3 bar	TRGN 7224	TRGN 7290	TRGN 7125	TRGN 7191
5000	130	460	520	NW 120	1,3 bar	TRGN 7225	TRGN 7291	TRGN 7126	TRGN 7192
6000	130	540	600	NW 120	1,3 bar	TRGN 7226	TRGN 7293	TRGN 7127	TRGN 7193
4000	160	240	315	NW 150	1,0 bar	TRGN 7212	TRGN 7278	TRGN 7113	TRGN 7179
5000	160	290	365	NW 150	1,0 bar	TRGN 7213	TRGN 7279	TRGN 7114	TRGN 7180
6000	160	350	425	NW 150	1,0 bar	TRGN 7214	TRGN 7280	TRGN 7115	TRGN 7181
8000	160	460	535	NW 150	1,0 bar	TRGN 7215	TRGN 7281	TRGN 7116	TRGN 7182
10000	160	580	655	NW 150	1,0 bar	TRGN 7216	TRGN 7282	TRGN 7117	TRGN 7183
5000	215	160	235	NW 200	0,5 bar	TRGN 7227	TRGN 7293	TRGN 7128	TRGN 7194
6000	215	200	275	NW 200	0,5 bar	TRGN 7228	TRGN 7294	TRGN 7129	TRGN 7195
8000	215	260	335	NW 200	0,5 bar	TRGN 7229	TRGN 7295	TRGN 7130	TRGN 7196
10000	215	320	395	NW 200	0,5 bar	TRGN 7230	TRGN 7296	TRGN 7131	TRGN 7197
15000	215	500	615	NW 200	0,5 bar	TRGN 7231	TRGN 7297	TRGN 7132	TRGN 7198
20000	215	650	725	NW 200	0,5 bar	TRGN 7231-20	TRGN 7297-20	TRGN 7132-20	TRGN 7198-20

Heatable reaction vessels , with vacuum jacket and valve

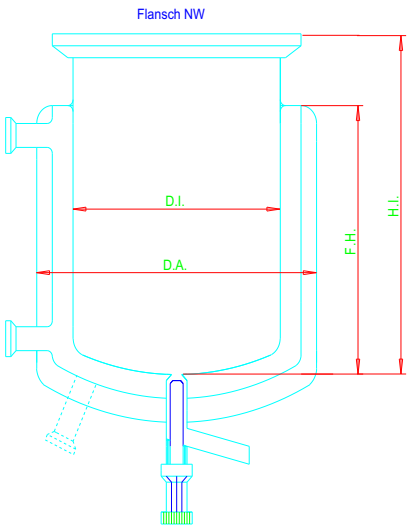

capacity	D.A.	D.I.	F.H.	H.I.	flange	B.D.bar	Art.No
250	130	60	100	160	NW 60	2,5 bar	TRGN 7550
500	130	60	185	235	NW 60	2,5 bar	TRGN 7551
250	150	100	50	110	NW 100	1,5 bar	TRGN 7560
500	150	100	75	135	NW 100	1,5 bar	TRGN 7561
1000	150	100	140	200	NW 100	1,5 bar	TRGN 7562
1000	190	120	110	170	NW 120	1,3 bar	TRGN 7566
2000	190	120	220	280	NW 120	1,3 bar	TRGN 7567
2000	225	150	130	205	NW 150	1,0 bar	TRGN 7575
3000	225	150	190	265	NW 150	1,0 bar	TRGN 7576
5000	225	150	300	375	NW 150	1,0 bar	TRGN 7577
10000	225	150	575	650	NW 150	1,0 bar	TRGN 7579
5000	300	200	185	260	NW 200	0,5 bar	TRGN 7580
6000	300	200	210	285	NW 200	0,5 bar	TRGN 7581
10000	300	200	340	415	NW 200	0,5 bar	TRGN 7583
15000	300	200	495	570	NW 200	0,5 bar	TRGN 7584
20000	300	200	650	725	NW 200	0,5 bar	TRGN 7585

Valve and thermal jacket joint

The L- valve is a dead volume free PTFE spindle valve with a spindle being pressed in while turning. The valve has a 10mm bore-hole.

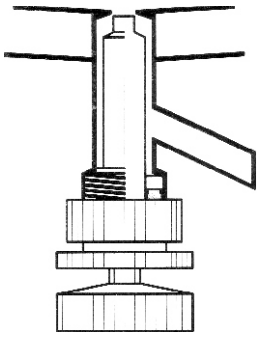

The J- valve is a dead volume free PTFE spindle valve. The spindle shall be pressed without turning. A spring pressured the PTFE spindle in the bore hole and closed the vessel with a high guaranty . The standard valve has a 10mm bore-hole, but you can have it with a 20mm bore-hole as well.

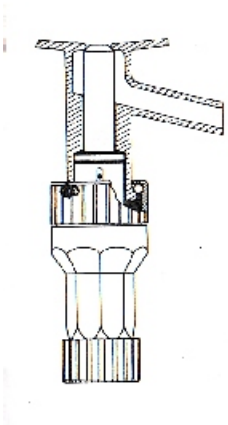

The DN 15 connection, for example, is a glass flange (1) with a metal screw cap and spring (2), a seal (3), all screwed by a metal adapter (4).

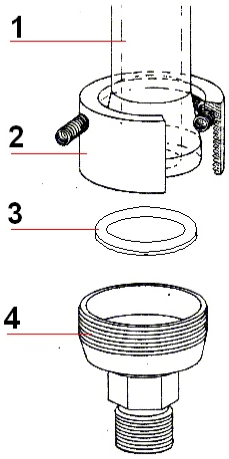

Metal adapter Art. No.: 4200
Silicon-seal Art. No.: 4201
PTFE-seal Art. No.: 4202

The olive connection is a glass thread joint GL 18 with a cap and a PTFE olive.

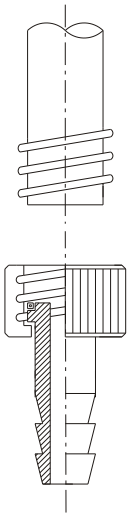

Olive straight
Art. No.: 4044
Olive angled
Art. No.:4044/A

Lid for reaction vessels

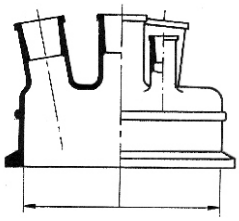

NW

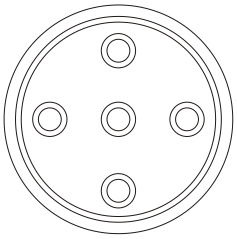

flange NW	center socket	side sockets angled	side sockets straight	height	P.max bar	Art.No.
60	29/32			125	1,5	D 4200
60	29/32	1 x 14/23		125	1,5	D 4201
60	29/32	2 x 14/23		125	1,5	D 4202
60	29/32	1 x 14/23	1 x 14/23	125	1,5	D 4203
60	29/32	1 x 19/26		125	1,5	D 4204
60	29/32		1 x 19/26	125	1,5	D 4205
60	29/32	2 x 14/23	1 x 19/26	125	1,5	D 4206
60	29/32	2 x 19/26	1 x 14/23	125	1,5	D 4207
100	29/32			125	1,0	D 4210
100	29/32	1 x 14/23		125	1,0	D 4211
100	29/32	2 x 14/23		125	1,0	D 4212
100	29/32	3 x 14/23		125	1,0	D 4213
100	29/32	1 x 29/32		125	1,0	D 4214
100	29/32	2 x 29/32	1 x 14/23	125	1,0	D 4215
100	29/32	3 x 29/32		125	1,0	D 4216
100	29/32	2 x 29/32	2 x 14/23	125	1,0	D 4217
100	45/40			150	1,0	D 4218
100	45/40	1 x 29/32		150	1,0	D 4219
100	45/40	2 x 29/32	1 x 14/23	150	1,0	D 4220
120	29/32			125	1,0	D 4235
120	29/32	1 x 29/32		125	1,0	D 4236
120	29/32	2 x 29/32		125	1,0	D 4237
120	29/32	3 x 29/32		125	1,0	D 4238
120	29/32	1 x 29/32	1 x 14/23	125	1,0	D 4239
120	29/32	2 x 29/32	1 x 14/23	125	1,0	D 4240
120	29/32	3 x 29/32	1 x 14/23	125	1,0	D 4241
120	29/32	4 x 29/32		125	1,0	D 4242
120	29/32	1 x 14/23	1 x 14/23	125	1,0	D 4243
120	29/32	2 x 14/23	1 x 14/23	125	1,0	D 4244
120	29/32	1 x 29/32	1 x 29/32	125	1,0	D 4245
120	29/32	1 x 29/32	1 x 19/26	125	1,0	D 4246
120	29/32	2 x 29/32	1 x 19/26	125	1,0	D 4247
120	29/32	3 x 29/32	1 x 19/26	125	1,0	D 4248
120	45/40	1 x 14/23		150	1,0	D 4249
120	45/40	2 x 14/23	1 x 14/23	150	1,0	D 4250
120	45/40	2 x 14/23	2 x 29/32	150	1,0	D 4251
120	45/40	2 x 29/32		150	1,0	D 4252
120	45/40	3 x 29/32	1 x 14/23	150	1,0	D 4253
120	45/40	2 x 29/32	2 x 14/23	150	1,0	D 4254
150	29/32	1 x 29/32		125	1,0	D 4261
150	29/32	2 x 29/32		125	1,0	D 4262
150	29/32	3 x 29/32		125	1,0	D 4263
150	29/32	1 x 29/32	1 x 14/23	125	1,0	D 4264

Lid for reaction vessels

flange NW	center socket	side sockets angled	side sockets straight	height	P.max bar	Art. No.
150	29/32	3 x 29/32	1 x 14/23	125	1,0	D 4266
150	29/32	4 x 29/32		125	1,0	D 4267
150	29/32	1 x 14/23	1 x 14/23	125	1,0	D 4268
150	29/32	2 x 14/23	1 x 14/23	125	1,0	D 4269
150	29/32	1 x 29/32	1 x 29/32	125	1,0	D 4270
150	29/32	1 x 29/32	1 x 19/26	125	1,0	D 4271
150	29/32	2 x 29/32	1 x 19/26	125	1,0	D 4272
150	29/32	3 x 29/32	1 x 19/26	125	1,0	D 4273
150	45/40	1 x 14/23		150	1,0	D 4274
150	45/40	2 x 14/23	1 x 14/23	150	1,0	D 4275
150	45/40	2 x 14/23	2 x 29/32	150	1,0	D 4276
150	45/40	2 x 29/32		150	1,0	D 4277
150	45/40	3 x 29/32	1 x 14/23	150	1,0	D 4278
150	45/40	2 x 29/32	2 x 14/23	150	1,0	D 4279
200	29/32			145	1,0	D 4285
200	29/32	1 x 29/32		145	1,0	D 4286
200	29/32	2 x 29/32		145	1,0	D 4287
200	29/32	3 x 29/32		145	1,0	D 4288
200	29/32	1 x 29/32	1 x 14/23	145	1,0	D 4289
200	29/32	2 x 29/32	1 x 14/23	145	1,0	D 4290
200	29/32	3 x 29/32	1 x 14/23	145	1,0	D 4291
200	29/32	4 x 29/32		145	1,0	D 4292
200	29/32	1 x 14/23	1 x 14/23	145	1,0	D 4293
200	29/32	2 x 14/23	1 x 14/23	145	1,0	D 4294
200	29/32	1 x 29/32	1 x 29/32	145	1,0	D 4295
200	29/32	1 x 29/32	1 x 19/26	145	1,0	D 4296
200	29/32	2 x 29/32	1 x 19/26	145	1,0	D 4297
200	29/32	3 x 29/32	1 x 19/26	145	1,0	D 4298
200	45/40	1 x 14/23		170	1,0	D 4299
200	45/40	2 x 14/23	1 x 14/23	170	1,0	D 4300
200	45/40	2 x 14/23	2 x 29/32	170	1,0	D 4301
200	45/40	2 x 29/32		170	1,0	D 4302
200	45/40	3 x 29/32	1 x 14/23	170	1,0	D 4303
200	45/40	2 x 29/32	2 x 14/23	170	1,0	D 4304

Accessories for reaction vessels

	O-ring	O-ring	quick release
glass	Silicon	FEP covered	clamp
flange NW	Art. No.	Art. No.	Art. No.
60	4052	4057	4047
100	4053	4058	4048
120	4054	4059	4049
150	4055	4060	4050
200	4056	4061	4051

Supporting device for reaction vessels

Supporting device for mounting reaction vessels in a frame made of 27mm V2A tubes, solid performance, high toughnes.

for flange NW	Art. No.
60	4065/B
100	4065
120	4065/A
150	4066
200	4067

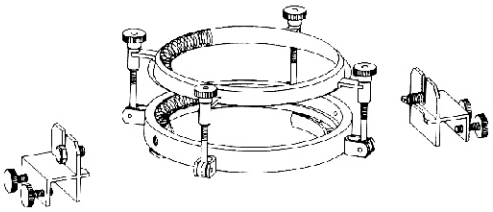

Supporting ring for reaction vessels

The supporting ring assists big reaction vessels in a frame with supporting device.

Ring outside	Ring inside	for flange NW	Art. No.
190	150	NW 100 / 150	7696
250	190	NW 150 / 200	7697

Frame for reaction vessels

Stationary frame made of 27mm V2A tubes

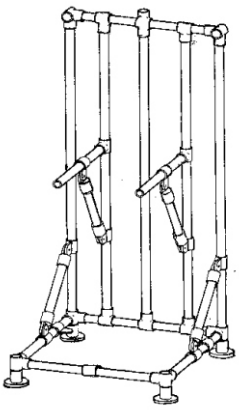

basic size	height	flange	Art. No.
mm	mm		
400 x 400	1200	NW 100	7680
450 x 450	1300	NW 120	7681
500 x 500	1500	NW 150	7682
600 x 600	1800	NW 200	7683

Transportable frame made of 27mm V2A tubes

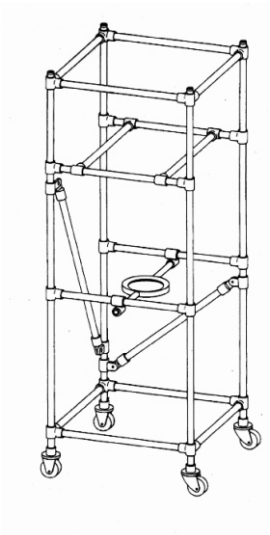

basic size	height	flange	Art. No.
mm	mm		
400 x 400	1200	NW 100	7685
450 x 450	1300	NW 120	7686
500 x 500	1500	NW 150	7687
600 x 600	1800	NW 200	7688

Stirrer coupling (stainless steel) are used to compensate any vibrations between stirrer and tools

Type	stirrer tool shaft	Art. No.
RKS 8/10	8 - 10 mm	40470
RKS 16	16 mm	40472

Stirrer coupling with metal spring

Type	stirrer tool shaft	Art. No.
RKK 10	8 - 10 mm	40477
RKK 16	16 mm	40478

Coupling for stirrer with cardan

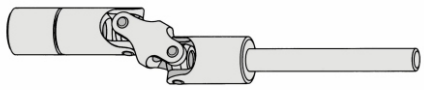

Standard dynamic stirrer seals with PTFE seals

Type	stirrer tool shaft	NS-joint	Art.No.
RV 8 / 29	8	NS29	40461
RV 10 / 29	10	NS29	40462
RV 16 / 29	16	NS29	40463
RV 8 / 45	8	NS45	40464
RV 10 / 45	10	NS45	40465
RV 16 / 45	16	NS45	40466

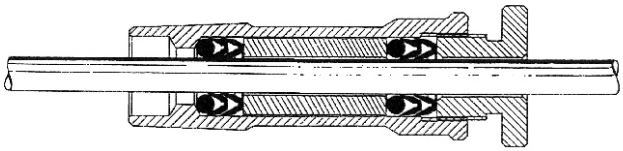

Magnet stirrer coupling for pressure and vacuum use

NS-joint	Moment of torsion	Art. No.
NS29/32	40 N/cm	404901
NS29/32	60 N/cm	404911
NS29/32	90 N/cm	404921
NS29/32	110 N/cm	404931
NS45/40	40 N/cm	404941
NS45/40	60 N/cm	404951
NS45/40	90 N/cm	404961
NS45/40	110 N/cm	404971

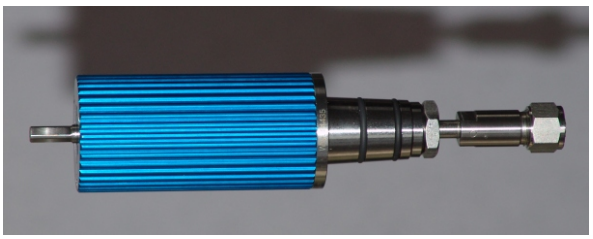

Tempering metal hoses

Metal hoses for temperatures of max. 300°C, with threaded joint M 16x1 for metal adapter.

length	Art. No.
0,5 m	4215
1,0 m	4216
2,0 m	4217
3,0 m	4218

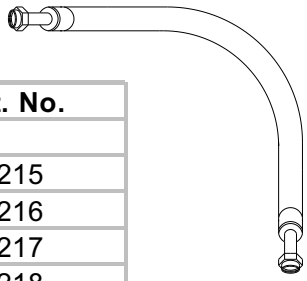

Stirrer made of stainless steal or glass

Anchor stirrer with two arms	Art.No. = AZ
Anchor stirrer with four arms	Art.No. = AV
Propeller stirrer with three arms	Art.No. = PD
Propeller stirrer with four arms	Art.No. = PV
Propeller stirrer with four arms and two propeller	Art.No. = PVZ

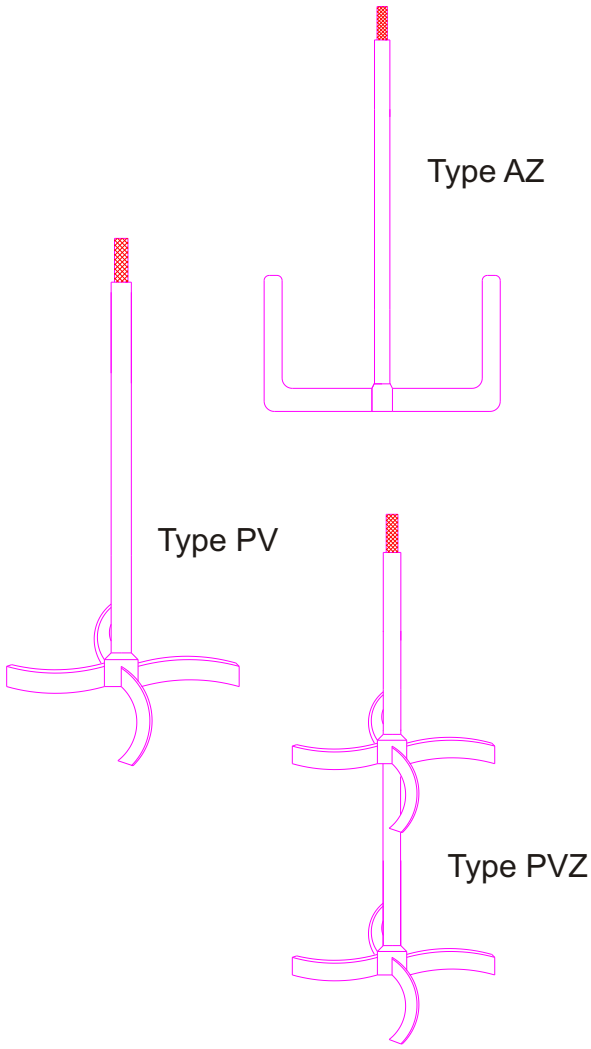

Shaft diameter	8 mm	Art.No. = W 8
	10 mm	Art.No. = W 10
	16 mm	Art.No. = W 16
Material	V4A	Art.No. = V
	glass	Art.No. = G
Coating	Halar	Art.No. = H
	glass	Art.No. = G
	no coating	Art.No. = K
Vessel Type		Art.No. = TRGN XXX

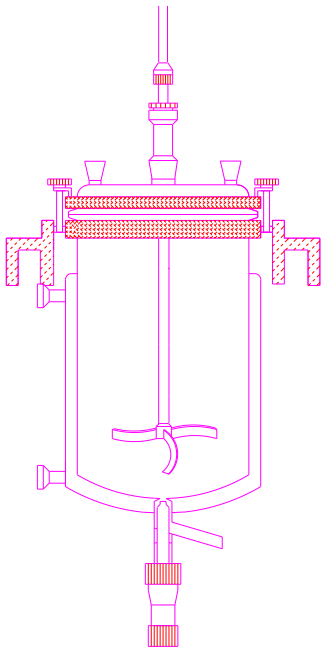

Example

Propeller stirrer with three arms - 10mm shaft - material V4A - no coating - vessel Type TRGN 7191

Art. No. = PD - W10 - V - K - TRGN 7191

Reaction vessel assemblies with stationary frame and accessories

The reactor assembly for maintaining temperature consists of:

a heatable reactor with bottom outlet valve type "J", 10 mm; metal adapters DN15 to male thread M16x1 for thermostat hoses and PTFE flat gasket; a lid with three angular side sockets NS 29/32, one suitable centre socket and FEP coated O ring; supporting device; V4A propeller stirrer; stirrer coupling; dynamic stirrer seal and frame out of V2A tubes.

Further essential accessories: thermostat hoses, stirrer machine, thermostat

On request we could also deliver an anchor stirrer.

Reactors with stationary frame

Reactor capacity litres	Reactor Type-KGW	Reactor flange NW	H.I. Reactor	Stirrer shaft	Lid centre socket NS 29 or 45	Art. no KGW
0,5	7172	100	140	10	NS 29	RK-FB 1
1	7173	100	210	10	NS 29	RK-FB 2
2	7174	100	330	10	NS 29	RK-FB 3
3	7175	100	450	10	NS 29	RK-FB 4
4	7176	100	590	10	NS 29	RK-FB 5
4	7179	150	315	16	NS 29	RK-FB 6
5	7180	150	365	16	NS 29	RK-FB 7
6	7181	150	425	16	NS 45	RK-FB 8
8	7182	150	535	16	NS 45	RK-FB 9
5	7194	200	235	16	NS 45	RK-FB 10
6	7195	200	275	16	NS 45	RK-FB 11
8	7196	200	335	16	NS 45	RK-FB 12

Reactor from 5 litres up: frame with supporting ring

Reaction vessel assemblies with mobile frame and accessories

The Reactor assembly for maintaining temperature consists of:

a heatable reactor with bottom outlet valve type "J", 10 mm; metal adapters DN15 to male thread M16x1 for thermostat hoses and PTFE flat gasket; a lid with three angular side sockets NS 29/32, one suitable centre socket and FEP coated O ring; supporting device; V4A propeller stirrer; stirrer coupling; dynamic stirrer seal and frame out of V2A tubes.

Further essential accessories: thermostat hoses, stirrer machine, thermostat

On request we could also deliver an anchor stirrer.

Reactors with mobile frame

Reactor capacity litres	Reactor Type-KGW	Reactor flange NW	H.I. Reactor	Stirrer shaft	Lid centre socket NS 29 or 45	Art. No KGW
4	7179	150	315	16	NS 29	RK-FB 15
5	7180	150	365	16	NS 29	RK-FB 16
6	7181	150	425	16	NS 45	RK-FB 17
8	7182	150	535	16	NS 45	RK-FB 18
10	7183	150	655	16	NS 45	RK-FB 19
5	7194	200	235	16	NS 45	RK-FB 20
6	7195	200	275	16	NS 45	RK-FB 21
8	7196	200	335	16	NS 45	RK-FB 22
10	7197	200	395	16	NS 45	RK-FB 23
15	7198	200	615	16	NS 45	RK-FB 24
20	7198-20	200	760	16	NS 45	RK-FB 25

Reactor from 5 litres up: frame with supporting ring

Construction, component parts and functional characteristics of mobile rack type Easy Frame

Advantages of the rack type Easy Frame

- fast changing of reactor
- only one person can easily install or remove the reactor
- no more loosening and dislocating of rack pipes while mounting the reactor, as necessary with ordinary frames
- reducing the risk of damage at flange or bottom outlet valve while mounting the reactor

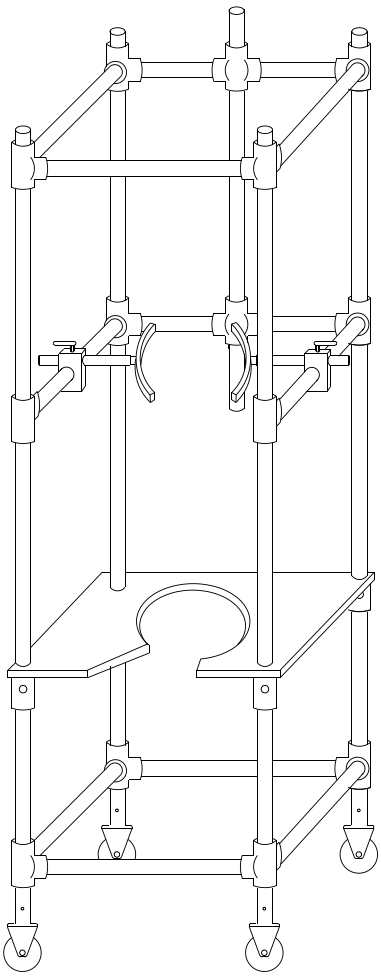

The mobile rack type Easy Frame consists of:

- a stainless steel pipe frame with blue coated aluminum connectors
- a setting board out of aluminum and a insert with cushioning
- two adjustable flange holders for positioning and securing the reactor at its flange
- a stirrer machine rod and wheels

Sizes of mobile rack type Easy

Easy Frame wheeled	basic dimension	height	borehole of the bent ring	flange holder	Art. No.
tube diameter 26,9mm	500 x 500	1400	150mm	NW 150	7701
	500 x 500	1600	150mm	NW 150	7702
	500 x 500	1800	150mm	NW 150	7703
tube diameter 26,9mm	500 x 500	1400	200mm	NW 200	7704
	500 x 500	1600	200mm	NW 200	7705
	500 x 500	1800	200mm	NW 200	7706

Further sizes and designs on request.

Complete reaction vessel assemblies with mobile rack type Easy Frame and accessories

The Reactor assembly for maintaining temperature consists of:

a heatable reactor with bottom outlet valve type "J"; metal adapters DN15 to male thread M16x1 for thermostat hoses and PTFE flat gasket; a lid with three angular side sockets NS 29/32, one suitable centre socket and FEP coated O ring; a setting board; flange holders; V4A propeller stirrer; stirrer coupling; dynamic stirrer seal and frame out of V2A tubes type Easy Frame.

Reactor with mobile rack type Easy Frame

Reactor capacity litres	Reactor Type-KGW	Reactor flange NW	H.I. Reactor	Stirrer shaft	Lid centre socket NS 29 or 45	Art. No KGW
4	7179	150	315	16	NS 29	RK-EF 15
5	7180	150	365	16	NS 29	RK-EF 16
6	7181	150	425	16	NS 45	RK-EF 17
8	7182	150	535	16	NS 45	RK-EF 18
10	7183	150	655	16	NS 45	RK-EF 19
5	7194	200	235	16	NS 45	RK-EF 20
6	7195	200	275	16	NS 45	RK-EF 21
8	7196	200	335	16	NS 45	RK-EF 22
10	7197	200	395	16	NS 45	RK-EF 23
15	7198	200	615	16	NS 45	RK-EF 24
20	7198-20	200	760	16	NS 45	RK-EF 25
30	7198-30 B	200	735	16	NS 45	RK-EF 30

Further essential accessories: thermostat hoses, stirrer machine, thermostat.

On request we could also deliver an anchor stirrer.